R-Wall Limited
Gwel Teg Week Orchard
Marhamchurch
Bude
Cornwall, EX23 0HT

Tel: 01288 377 337
e-mail: info@r-wall.co.uk
website: www.r-wall.co.uk

Agrément Certificate
20/5809
Product Sheet 1

R-WALL FORMWORK SYSTEMS

R-WALL INSULATING CONCRETE FORMWORK (ICF) SYSTEM

This Agrément Certificate Product Sheet(1) relates to the R-Wall Insulating Concrete Formwork (ICF) System, comprising extruded polystyrene (XPS) boards with rigid plastic web connectors. The system provides permanent insulated formwork for use in the formation of loadbearing and non-loadbearing internal, external and separating walls in domestic and non-domestic buildings, subject to height restrictions.

(1) Hereinafter referred to as 'Certificate'.

CERTIFICATION INCLUDES:

- factors relating to compliance with Building Regulations where applicable
- factors relating to additional non-regulatory information where applicable
- independently verified technical specification
- assessment criteria and technical investigations
- design considerations
- installation guidance
- regular surveillance of production
- formal three-yearly review.

KEY FACTORS ASSESSED

Structural performance — the system components have adequate strength to resist the loads associated with installation (see section 6).

Thermal performance — the system contributes to the overall thermal performance of the wall construction (see section 7).

Risk of condensation — walls, wall junctions and openings can adequately limit the risk of condensation (see section 9).

Behaviour in relation to fire — the system components are not classified as non-combustible materials and their use is restricted in some cases (see section 13).

Durability — the system will have a service life in excess of 60 years (see section 16).

The BBA has awarded this Certificate to the company named above for the system described herein. This system has been assessed by the BBA as being fit for its intended use provided it is installed, used and maintained as set out in this Certificate.

On behalf of the British Board of Agrément

Date of First issue: 8 October 2020

Hardy Giesler
Chief Executive Officer

The BBA is a UKAS accredited certification body – Number 113.
The schedule of the current scope of accreditation for product certification is available in pdf format via the UKAS link on the BBA website at www.bbacerts.co.uk
Readers MUST check the validity and latest issue number of this Agrément Certificate by either referring to the BBA website or contacting the BBA directly.
Any photographs are for illustrative purposes only, do not constitute advice and should not be relied upon.

Regulations

In the opinion of the BBA, the R-Wall Insulating Concrete Formwork (ICF) System, if installed, used and maintained in accordance with this Certificate, can satisfy or contribute to satisfying the relevant requirements of the following Building Regulations (the presence of a UK map indicates that the subject is related to the Building Regulations in the region or regions of the UK depicted):

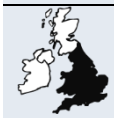

The Building Regulations 2010 (England and Wales) (as amended)

Requirement:	**B3(4)**	**Internal fire spread (Structure)**
Comment:		The system is restricted by this Requirement. See sections 13.1, 13.7 and 13.8 of this Certificate.
Requirement:	**B4(1)**	**External fire spread**
Comment:		The system is restricted by this Requirement. See sections 13.1 and 13.2 of this Certificate.
Requirement:	**C2(c)**	**Resistance to moisture**
Comment:		The system can adequately limit the risk of surface condensation and contribute to minimising the risk of interstitial condensation. See sections 9.1, 9.3 and 9.4 of this Certificate.
Requirement:	**L1(a)(i)**	**Conservation of fuel and power**
Comment:		The system can contribute to satisfying this Requirement, although additional insulation will be required for dwellings in Wales. See sections 7 and 8.1 of this Certificate.
Regulation:	**7(1)**	**Materials and workmanship**
Comment:		The system is acceptable. See section 16 and the *Installation* part of this Certificate.
Regulation:	**7(2)**	**Materials and workmanship**
Comment:		The system is restricted by this Regulation. See sections 13.1 and 13.2 of this Certificate.
Regulation:	**26**	**CO_2 emission rates for new buildings**
Regulation:	**26A**	**Fabric energy efficiency rates for new dwellings (applicable to England only)**
Regulation:	**26A**	**Primary energy consumption rates for new buildings (applicable to Wales only)**
Regulation:	**26B**	**Fabric performance values for new dwellings (applicable to Wales only)**
Comment:		The system can contribute to satisfying these Regulations but compensating fabric and/or services measures will be required for dwellings. See sections 7 and 8.1 of this Certificate.

The Building (Scotland) Regulations 2004 (as amended)

Regulation:	**8(1)(2)**	**Durability, workmanship and fitness of materials**
Comment:		The system can contribute to a construction satisfying this Regulation. See sections 15 and 16 and the *Installation* part of this Certificate.
Regulation:	**9**	**Building standards applicable to construction**
Standard:	2.1	Compartmentation
Standard:	2.2	Separation
Standard:	2.3	Structural protection
Comment:		The system is restricted by these Standards, with reference to clauses 2.1.12(2), 2.2.4(2), 2.2.5(2), 2.2.6(1), 2.2.7(1), 2.2.8(1) and 2.3.2(1)(2). See sections 13.1, 13.3 and 13.7 to 13.9 of this Certificate.

Standard:	2.4	Cavities
Comment:		The system is restricted by this Standard, with reference to clauses 2.4.2[(1)(2)], 2.4.4[(1)] and 2.4.6[(2)]. See sections 13.1 and 13.3 of this Certificate.
Standard:	2.6	Spread to neighbouring buildings
Comment:		The system is restricted by this Standard, with reference to clauses 2.6.5[(1)] and 2.6.6[(2)]. See sections 13.1 and 13.3 of this Certificate.
Standard:	3.15	Condensation
Comment:		Walls can adequately limit the risk of surface condensation, with reference to clauses 3.15.1[(1)(2)] and 3.15.4[(1)(2)] of this Standard. Walls can contribute to minimising the risk of interstitial condensation, with reference to clauses 3.15.1[(1)(2)] and 3.15.5[(1)(2)] of this Standard. See sections 9.2 to 9.4 of this Certificate.
Standard:	6.1(b)	Carbon dioxide emissions
Comment:		The system can contribute to satisfying this Standard when compensating fabric and/or services measures are taken, with reference to clauses 6.1.1[(1)], 6.1.2[(1)] and 6.1.6[(1)]. See sections 7 and 8.1 of this Certificate.
Standard:	6.2	Building insulation envelope
Comment:		The system can contribute to satisfying this Standard, although additional insulation will be required for dwellings, with reference to clauses 6.2.1[(1)(2)], 6.2.3[(1)], 6.2.4[(2)] and 6.2.5[(2)]. See sections 7 and 8.1 of this Certificate.
Standard:	7.1(a)(b)	Statement of sustainability
Comment:		The system can contribute to meeting the relevant requirements of Regulation 9, Standards 1 to 6, and therefore will contribute to a construction meeting a bronze level of sustainability as defined in this Standard.
Regulation:	**12**	**Building standards applicable to conversions**
Comment:		Comments in relation to the system under Regulation 9, Standards 1 to 6, also apply to this Regulation, with reference to clause 0.12.1[(1)(2)] and Schedule 6[(1)(2)].

(1) Technical Handbook (Domestic).
(2) Technical Handbook (Non-Domestic).

The Building Regulations (Northern Ireland) 2012 (as amended)

Regulation:	**23(a)(i) (iii)(b)(i)**	**Fitness of materials and workmanship**
Comment:		The system is acceptable. See section 16 and the *Installation* part of this Certificate.
Regulation:	**29**	**Condensation**
Comment:		The system can contribute to minimising the risk of interstitial condensation. See sections 9.3 and 9.4 of this Certificate.
Regulation:	**35(4)**	**Internal fire spread – Structure**
Comment:		The system is restricted by this Regulation. See sections 13.1, 13.7 and 13.8 of this Certificate.
Regulation:	**36(a)**	**External fire spread**
Comment:		The system is restricted by this Regulation. See sections 13.1 and 13.2 of this Certificate.
Regulation:	**39(a)(i)**	**Conservation measures**
Regulation:	**40(2)**	**Target carbon dioxide emission rate**
Comment:		The system can contribute to satisfying these Regulations. See sections 7 and 8.1 of this Certificate.

Construction (Design and Management) Regulations 2015
Construction (Design and Management) Regulations (Northern Ireland) 2016

Information in this Certificate may assist the client, designer (including Principal Designer) and contractor (including Principal Contractor) to address their obligations under these Regulations.

See section: 3 *Delivery and site handling* (3.4) and the *Installation* part of this Certificate.

Additional Information

NHBC Standards 2020

In the opinion of the BBA, the R-Wall Insulating Concrete Formwork (ICF) System, if installed, used and maintained in accordance with this Certificate, can satisfy or contribute to satisfying the relevant requirements in relation to *NHBC Standards*, Part 3 *General*, Chapter 3.1 *Concrete and its reinforcement*.

CE marking

The manufacturer of the extruded polystyrene (XPS) has taken the responsibility of CE marking the product in accordance with harmonised European Standard BS EN 13164 : 2012.

Technical Specification

1 Description

1.1 The R-Wall Insulating Concrete Formwork (ICF) System is a permanent formwork system consisting of two extruded polystyrene (XPS) boards, connected by rigid plastic web connectors. The wall is formed when the formwork cavity is infilled with concrete.

1.2 The system comprises four main elements: XPS board, rails, ties and corner profiles (see Figure 1). The elements are available in various sizes, which can be cut and assembled to the required wall formwork construction.

Table 1 R-Wall Formwork construction types

Board types / wall construction	Length (mm)	Height (mm)	XPS inner	XPS outer	Concrete core
			Nominal thickness (mm)		
R-Wall ECO (50 mm)	1250 - 2500	298	50	50	All R-Tie lengths (159, 212, 262, 313)
R-Wall Standard (75 mm)	1250 - 2500	298	75	75	
R-Wall Supreme (100 mm)	1250 - 2500	298	100	100, 125	
R-Wall Ultimate (125 mm)	1250 - 2500	298	125 - 150	125 - 150	
R-Wall Superior (150 mm)	1250 - 2500	298	125 - 150	125 - 150	

1.3 The boards are 1250 to 2500 mm long by 298 mm high, in straight forms with thicknesses of 50 to 150 mm. The nominal specifications of the board are shown in Table 1.

Table 2 XPS nominal specifications

XPS properties	Value
Minimum density (kg.m^{-3})	33
Minimum compressive strength (kPa)	>300
Reaction to fire (BS EN 13163)	E

1.4 The rigid web connectors consist of R-Rails, R-Ties and R-Corner profiles (the 'R-components'). The rails are up to 2500 mm in length by 50 mm wide, with a double arrowhead on one side (see Figure 1) to key lock (snap-in) the horizontal connection with the R-Ties on both inner faces of formwork and cross connect the inner and outer XPS boards together, so that they have adequate resistance to pull-out.

Figure 1 R-Wall formwork components

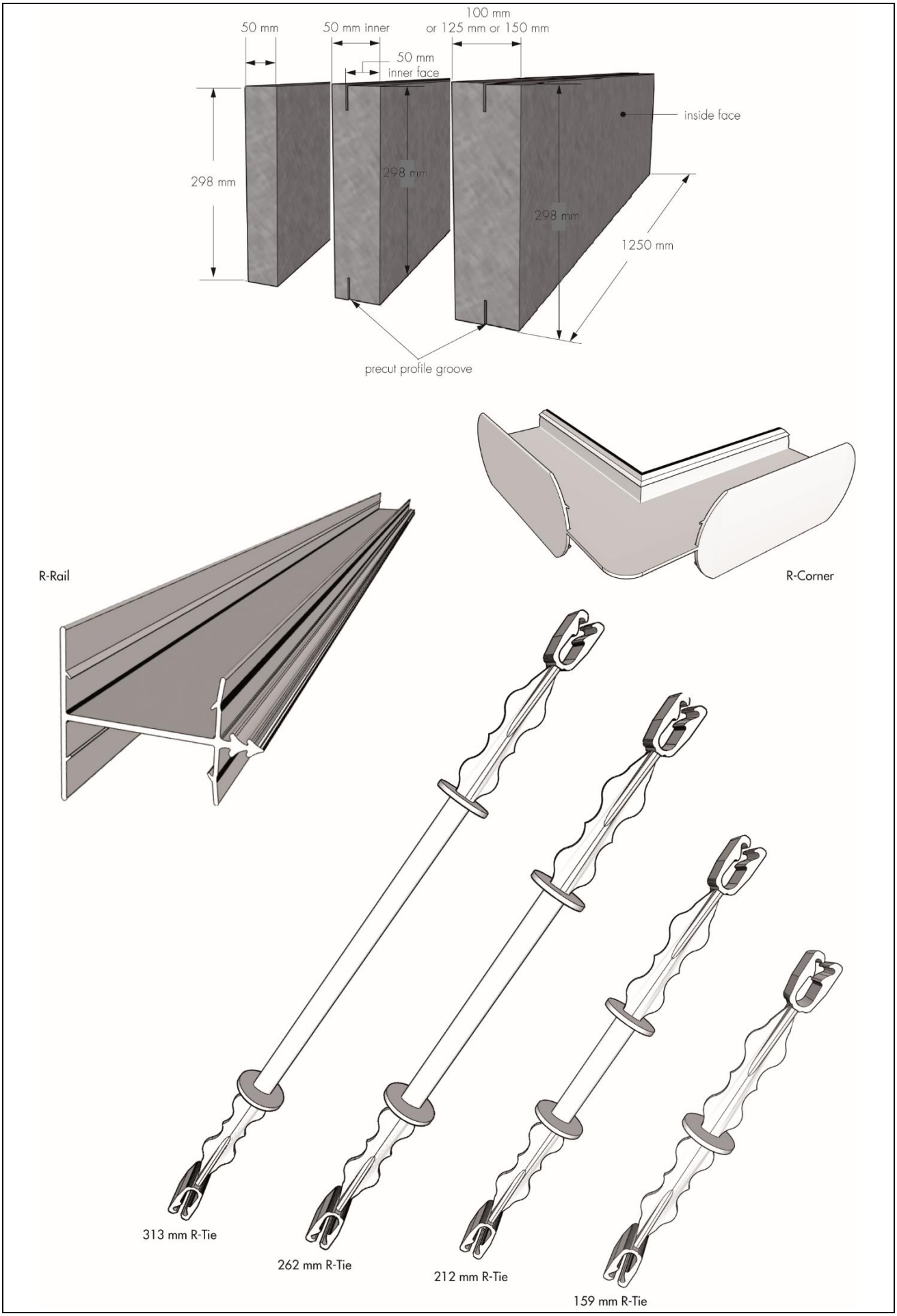

1.5 The R-Ties have nominal lengths of 159, 212, 262 and 313 mm and are used to create equal widths of concrete core thicknesses, as shown in Figure 2. The distance between the R-Tie connectors in longitudinal and vertical directions of the formwork is 200 and 298 mm respectively. The R-Corner profiles have an external dimension of 156 mm on either leg and are used to joint the forms at their corners.

1.6 The top edges of the R-Tie connectors have concaved slots to accommodate horizontal steel reinforcement, where required, with 40 to 50 mm of cover from each face of the wall. Where required, vertical steel reinforcement can also be placed at intervals against the horizontal reinforcement and secured in place using standard steel reinforcement wire tying methods. The design of the steel reinforcement must be carried out by a suitably experienced structural engineer.

Figure 2 Concrete core tie options

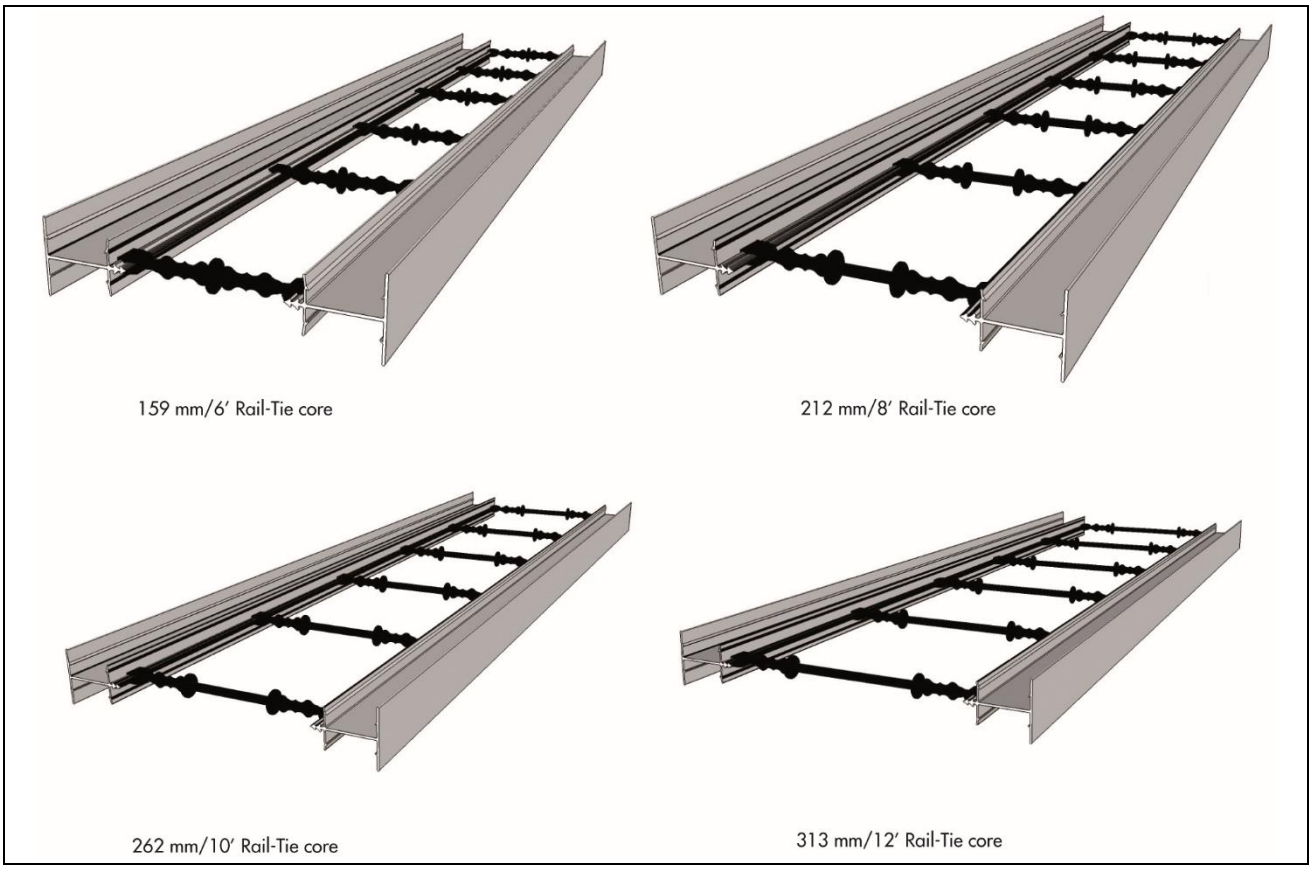

1.7 The elements build horizontally and vertically into a tight rigid formwork (see Figure 3) as the R-rails slot into pre-cut grooves in the top and bottom edges of the boards and provide a mechanical interlock, which also prevents seepage of concrete slurry through the joints.

1.8 The R-Wall components and the boards are assembled together to create the typical wall constructions shown below.

Figure 3 Typical R-Wall Formwork

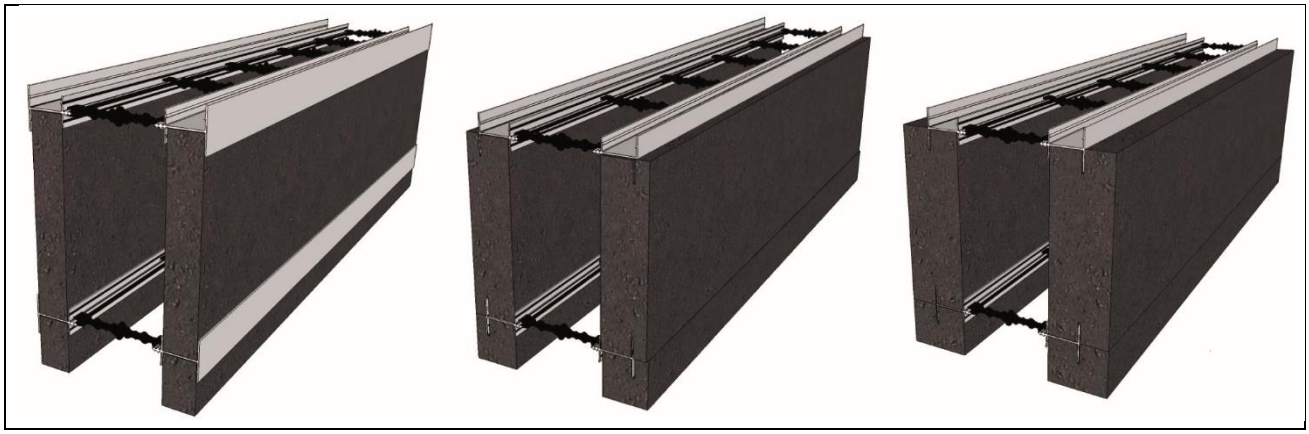

1.9 The formwork requires temporary support during concrete filling and until the concrete has gained sufficient strength to allow the wall to become stable.

1.10 Concrete strength class C25/35 is specified to BS 8500-1 : 2015 and BS EN 206-1 : 2013 for a 'typical' mix(1) with recommended aggregate size up to 10 mm (over-sanded) to a class (slump) S3 between 100 and 120 mm. The Certificate holder does not recommend the use of admixtures. If an admixture is used, it should comply with BS EN 934-2 : 2009 to allow placement by free-flow without compaction, or with minimal compaction using vibrating pokers. Specific ready mixes(1) are dependent on individual requirements and are outside the scope of this Certificate.

(1) sourced from suppliers who operate a full quality control scheme, such as the Quality Scheme for Ready-Mixed Concrete (QSRMC) or BSI Kitemark.

1.11 Components and finishes specified for use with the system, but outside the scope of this Certificate, are:

- concrete core — as specified in section 1.9
- steel reinforcement, where required —should comply with BS 4449 : 2005
- external masonry — may be of brickwork or stonework fixed in accordance with the provisions of BS EN 1996-2 : 2006 or BS 8298-1 : 2010, BS 8298-2 : 2010 and BS 8298-3 : 2010 as appropriate
- brickwork/stonework ties to BS EN 845-1 : 2013
- temporary bracing and alignment support system as supplied by the Certificate holder
- waterproofing membrane as required (see section 12.2)
- external render — in accordance with BS EN 13914-1 : 2016 and suitable for use with the system
- brick slip systems with third-party certification — the Certificate holder's advice should be sought
- cladding — timber, cement board or metal sheet
- internal finish — typically 12.5 mm thick plasterboard or a dry-lined finish, with or without a plaster skim coat conforming to BS EN 1992-1-2 : 2004
- frame ties — type 6, stainless steel frame ties can be screwed into the rails for walls up to 10 m high and in areas likely to experience low wind loads.

2 Manufacturers

2.1 The insulating elements of the wall system are manufactured from XPS in accordance with BS EN 13164 : 2012.

2.2 The R-components (R-Rails, R-Ties and R-Corners) of the wall system are made from recycled thermoplastics.

2.3 As part of the assessment and ongoing surveillance of product quality, the BBA has:

- agreed with the manufacturer the quality control procedures and product testing to be undertaken
- assessed and agreed the quality control operated over batches of incoming materials
- monitored the production process and verified that it is in accordance with the documented process
- evaluated the process for management of nonconformities
- checked that equipment has been properly tested and calibrated
- undertaken to carry out the above measures on a regular basis through a surveillance process, to verify that the specifications and quality control operated by the manufacturer are being maintained.

3 Delivery and site handling

3.1 Good site practice should be observed to prevent damage to the formwork elements.

3.2 The system components are supplied in shrink-wrapped protective polythene and delivered to site on pallets. The package components are clearly labelled with the manufacturer's name, type marking and the BBA logo incorporating the Certificate number. The wrapping should not be opened until the contents are required.

3.3 The system components should be stored upright, on flat ground protected from damage and UV light.

3.4 Care must be taken when handling the XPS elements to avoid damage and contact with solvents or materials containing volatile organic components such as newly treated timber. The elements must not be exposed to open flame or other ignition sources.

Assessment and Technical Investigations

The following is a summary of the assessment and technical investigations carried out on the R-Wall Insulating Concrete formwork (ICF) System.

Design Considerations

4 Use

4.1 The R-Wall Insulating Concrete formwork (ICF) System is for use in loadbearing and non-loadbearing internal or external and separating walls, in domestic and non-domestic buildings subject to structural and fire considerations and building use.

4.2 The system provides permanent formwork for in-situ dense aggregate concrete walls and contributes to the thermal insulation of the finished construction.

4.3 The system is for use with the internal and external finishes specified in this Certificate.

4.4 Walls formed from the system are subject to design and supervision by a suitably qualified and competent individual, and adherence to structural design to British or European Standards (see section 6.1).

5 Practicability of installation

Construction of the system must be carried out by trained operatives experienced with this type of system, in accordance with the Certificate holder's installation manual, or by installers who have been trained by the Certificate holder.

6 Structural performance

General

6.1 Walls formed from the system subject to the national Building Regulations should be designed in accordance with the relevant recommendations of BS 8102 : 2009 and limit principles set out in BS EN 1990 : 2002 to loadings in BS EN 1991-1-1 : 2002, BS EN 1991-1-2 : 2002, BS EN 1991-1-3 : 2003, BS EN 1991-1-4 : 2005, BS EN 1991-1-5 : 2003, BS EN 1991-1-6 : 2005, BS EN 1991-1-7 : 2006, BS EN 1992-1-1 : 2004 and BS EN 1992-1-2 : 2004 and their UK National Annexes. A suitably qualified individual such as a Chartered Structural Engineer must also ensure that the foundations (outside the scope of this Certificate) are adequate to support the intended loads.

6.2 Walls formed from the system which are not subject to the national Building Regulations should also be designed in accordance with the Standards listed in section 6.1.

6.3 The concrete is not easily examined after casting. Hence, as specified in BS EN 1992-1-1 : 2004, Sections 4 and 8, care must be taken to ensure full compaction. Compaction may be checked by removal, observation and replacement of a section of XPS board. Particular attention should be given to basement walls (outside the scope of this Certificate) and areas adjacent to formed structural openings.

6.4 Storey height concrete walls are normally constructed in one continuous pour, progressing around the perimeter of the building in pour heights of between 1 and 1.2 m using free-flowing, pumpable concrete mixes. Particular care is necessary to maintain alignment during concrete filling to ensure checking between pours. Propping systems used in conjunction with the system, must be checked prior to and during concreting filling to ensure stability and alignment is maintained.

6.5 The Certificate holder recommends the careful use of a vibrating poker for the compaction of wet concrete, following guidance in the installation manual.

6.6 Heavy wall attachments or finishes, fixed either internally or externally, must be attached via support systems designed to take account of the applied load using suitable fixings or plates fixed or cast into the concrete core. Heavy attachments must not be fixed to the R-Ties or R-Profiles.

6.7 Particular attention should be paid to the type of concrete mix(1) used (as described in section 1.10), to ensure segregation does not occur and the wet concrete is allowed to flow freely around formed openings and through congested areas of reinforcement. It is recommended that a pumpable concrete of grade C25/35, and aggregate with a maximum size of 10 mm, is used. The Certificate holder can provide guidance on concrete strength and the water–cement ratio. Generally, slump class should be S3 for C28/35 and C20/25 in accordance with BS 8500-1 : 2015.

(1) sourced from suppliers who operate a full quality control scheme, such as the Quality Scheme for Ready-Mixed Concrete (QSRMC) or BSI Kitemark.

6.8 The nominal concrete cover to reinforcement should be suitable for the environmental exposure conditions X01 and XC1 for the concrete as described in BS EN 206-1 : 2013, Table 1, using the appropriate concave slot on the R-Tie connectors.

6.9 To achieve structurally stable formwork during the construction process, the system must be braced sufficiently to resist the loads imparted on the system by wet concrete, wind loads and other construction loads acting on both faces of the wall. The Certificate holder recommends a specific propping/support system (similar to the one shown in Figure 4, below) designed to give lateral support during the pouring of the concrete and at the curing stage. The Certificate holder can provide a bracing system that allows for adjustment both prior to and immediately following pouring operations.

Figure 4 R-Wall Propping / Support system

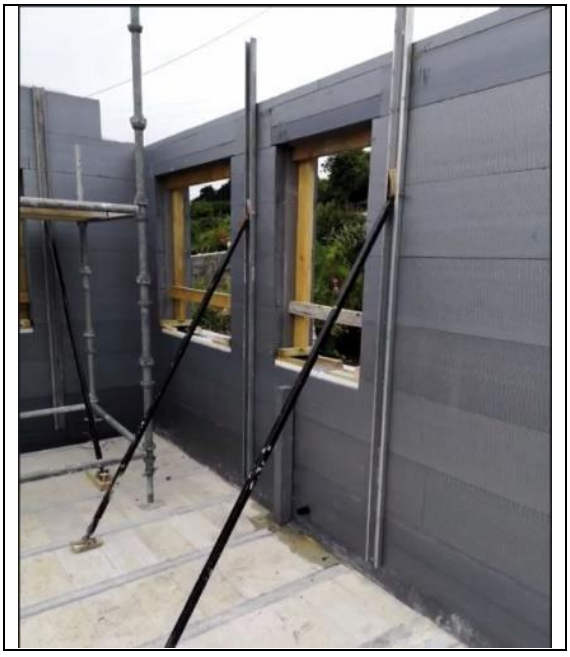

6.10 Attention is drawn to the need for accurate levelling of the foundation and initial setting out of the propping (see sections 18.14 and 18.15), which should prevent the need for significant adjustments to be made.

7 Thermal performance

7.1 Calculations of thermal transmittance (U value) should be carried out in accordance with BS EN ISO 6946 : 2017 and BRE Report BR 443 : 2019, using the declared thermal conductivity (λ_D) values, and the R-profiles transmittance corrections, in Tables 3 and 4 respectively, below.

Table 3 Declared thermal conductivity (λ_D)

Insulation type	**Density ($kg \cdot m^{-3}$)**	**Declared thermal conductivity ($W \cdot m^{-1} \cdot K^{-1}$)**
R-Wall ECO & Standard	33	0.033
R-Wall Supreme	33	0.033
R-Wall Ultimate	33	0.034
R-Wall Superior	33	0.036

Table 4 R-profiles thermal transmittance correction (ΔU)

R-Wall Options	**Thickness (mm)**		**Thermal transmittance correction, ΔU ($W \cdot m^{-2} \cdot K^{-1}$)**
	Inner	**Outer**	
R-Wall ECO	50	50	0.009
R-Wall Standard	75	75	0.005
R-Wall Supreme, Ultimate & Superior	50	100	0.005
	50	125	0.003
	50	150	0.003
	75	100	0.004
	75	125	0.003
	75	150	0.002
	100	100	0.003
	100	125	0.002
	100	150	0.002
	125	125	0.002
	125	150	0.002
	150	150	0.001

7.2 The U value will depend on the construction of the wall, the finish, and the number and type of fixings used. Example construction U-values obtainable by the R-Wall system are given in Table 5, below:

Table 5 Thermal transmittance (U-value)(1)

R-Wall options	Thickness (mm)		Thermal transmittance, U-value ($W \cdot m^{-2} \cdot K^{-1}$)
	Inner	Outer	
R-Wall ECO	50	50	0.30
R-Wall Standard	75	75	0.21
R-Wall Supreme, Ultimate & Superior	50	100	0.21
	50	125	0.19
	50	150	0.17
	75	100	0.18
	75	125	0.17
	75	150	0.15
	100	100	0.17
	100	125	0.15
	100	150	0.14
	125	125	0.14
	125	150	0.13
	150	150	0.12

(1) Construction build-up (Internal to external): 13 mm plaster (λ = 0.56 $Wm^{-1}K^{-1}$), R-Wall ICF option with 159 mm concrete infill, 10 mm render (λ = 1.0 $Wm^{-1}K^{-1}$) with a Psi value Ψ = 0.03 W/(m.K) to BS EN ISO 10211 : 2017.
(2) ΔU correction ≤3%

7.3 Other than those constructions listed in Table 5, specific thermal calculations will need to be carried out in accordance with the Standards specified in section 7.1, to determine U-values. This is the responsibility of the designer of the building.

Junctions

7.4 The system can contribute to maintaining continuity of thermal insulation at junctions with other elements and minimise thermal bridges and air infiltration. Detailed guidance can be found in the documents supporting the national Building Regulations.

8 Airtightness

8.1 Walls formed from the system can achieve adequate resistance to unwanted air infiltration provided there is effective sealing around junctions.

8.2 Completed buildings are subject to pre-completion testing in accordance with the national Building Regulations.

8.3 Completed buildings in Scotland are only subject to pre-completion airtightness testing if the target air permeability of the proposed building is less than 10 $m^3 \cdot h^{-1} \cdot m^{-2}$, or if the figure is between 10 $m^3 \cdot h^{-1} \cdot m^{-2}$ and 15 $m^3 \cdot h^{-1} \cdot m^{-2}$ and the designer does not wish to use the 15 $m^3 \cdot h^{-1} \cdot m^{-2}$ default figure in the proposed dwelling, in accordance with the national Building Regulations.

9 Risk of condensation

Surface condensation

9.1 Walls will adequately limit the risk of surface condensation when the thermal transmittance (U-value) does not exceed 0.7 $Wm^{-2}\cdot K^{-1}$ at any point, and the junctions with other elements are designed in accordance with the guidance referred to in section 7.4 of this Certificate.

9.2 For buildings in Scotland, wall constructions will be acceptable when the thermal transmittance (U-value) does not exceed 1.2 $Wm^{-2}\cdot K^{-1}$ at any point, and the junctions with other elements are designed in accordance with the guidance referred to in BS 5250 : 2011, Annex G. Further guidance may be obtained from BRE Report BR 262 : 2002 and section 7.4 of this Certificate.

Interstitial condensation

9.3 Walls will adequately limit the risk of interstitial condensation when they are designed and constructed in accordance with BS 5250 : 2011, Annexes D and G, and the relevant guidance.

9.4 The water vapour diffusion resistance factor (μ) of the XPS insulation taken from BS EN ISO 10456 : 2007, Table 4, is 150. The reinforced concrete (dry) is taken as 130 (max 2% steel, $\lambda = 2.5\ Wm^{-1}\cdot K^{-1}$), from Table 3.

10 Sound insulation

10.1 Separating walls with a concrete core density greater than 2200 $kg\cdot m^{-3}$ and thickness of 159 mm, together with a single layer of plasterboard on each side, will achieve a required minimum mass per unit area for the core of 300 $kg\cdot m^{-2}$. When used in conjunction with suitable framing, lining and flanking details, the wall can satisfy the requirements of a Type 3 wall, as described in Approved Document E, Sections 2 and 3, of the England and Wales Building Regulations.

10.2 Separating walls are subject to pre-completion testing in accordance with the documents supporting the national Building Regulations.

10.3 Internal walls and walls flanking separating walls in new dwellings, and in rooms for residential purposes, should have a minimum mass per unit area, excluding finishes, in excess of 120 $kg\cdot m^{-2}$.

11 Weathertightness

Resistance to rain ingress is provided by the external finishes but this has not been assessed by the BBA and is outside the scope of this Certificate. Care should be taken to ensure the design and construction comply with the relevant good practice described in the applicable codes and the Certificate holder's installation procedures.

12 Damp-proofing and waterproofing

12.1 The system's elements will not transmit moisture by capillary action. Concrete walls formed with the system should be constructed using the specified concrete recommended by the Certificate holder (see sections 1.10 and 6.7).

12.2 Use of the system below ground to resist the effect of hydrostatic head or ground water ingress has not been assessed and is outside the scope of this Certificate. However, for general guidance, when used below ground or at formation level (eg basements or retaining walls), waterproofing membranes which are compatible with XPS should be used. A suitable collector drain and backfilling medium should be provided to eliminate the build-up of hydrostatic head behind the wall, where required. The Certificate holder should be consulted for advice on suitable waterproofing materials and methods of waterproofing.

12.3 The damp proofing of the wall constructed from the ICF system must be continuous with the damp proof membrane provided in the floor and must achieve continuity with any membrane or damp proof course provided in the external finish of the wall.

13 Behaviour in relation to fire

13.1 The XPS component of the system is not classified as 'non-combustible'; therefore, the system is limited for use in buildings subject to height restrictions.

13.2 In England, Wales and Northern Ireland, the system should not be used in buildings with a storey more than 18 m above ground level.

13.3 In Scotland, the system may be used without restriction on proximity to a relevant boundary, and as external walls of buildings with no storey more than 18 m above the ground, provided it is installed with an outer leave of masonry at least 75 mm thick, and with a cavity barrier around all openings in the wall and at the top of the wall head. For other constructions, the system should not be used 1 m or less from a boundary or in a building with a storey more than 11 m above the ground. Additional restrictions apply to separating elements.

13.4 The risk of fire spread over the internal wall surface will depend on the finishes used (internal finishes are not covered by this Certificate). The relevant requirements of the national Building Regulations must be observed.

13.5 To limit the risk of fire spread between floors in buildings subject to the national Building Regulations, fire barriers (outside the scope of this Certificate) must be installed as required in the documents supporting the national Building Regulations. Fire barriers must completely seal the cavity and be chased into the outer XPS formwork.

13.6 Care must be taken to ensure that all detailing at junctions, including internal wall/floor junctions, adequately maintains the required periods of fire resistance, any cavities formed in the completed walls or service entry points are appropriately fire stopped and detailing around any openings provide sufficient protection to the XPS. The XPS on the interior face should be discontinuous across wall / floor junctions.

Fire resistance of concrete core

13.7 Fire resistance values for various concrete wall thicknesses formed using the elements are given in Table 5.4 of BS EN 1992-1-2 : 2004.

13.8 For reinforced concrete walls designed in accordance with BS EN 1992-1-1 : 2004, fire resistance values for various concrete wall thicknesses given in Table 5.4 of BS EN 1992-1-2 : 2004 can be used subject to cover and design load considerations (see Table 6 of this Certificate). For unreinforced walls acting as fire walls, the minimum thickness requirements set out in BS EN 1992-1-2 : 2004, clause 5.4.2, must be taken into account. This assessment does not take account of any additional protection provided by the internal and external finishes.

Table 6 Minimum concrete core thickness for loadbearing reinforced concrete walls[1]

Standard fire resistance	Minimum dimensions (mm) Wall thickness/axis[2]			
	μfi[3] = 0.35		μfi[3] = 0.7	
	wall exposed on one side	wall exposed on two sides	wall exposed on one side	wall exposed on two sides
REI 30	100/10[4]	120/10[4]	120/10[4]	120/10[4]
REI 60	110/10[4]	120/10[4]	130/10[4]	140/10[4]
REI 90	120/20[4]	140/10[4]	140/25	170/25

(1) Taken from BS EN 1992-1-2 : 2004, Table 5.4.
(2) Centre of reinforcement to nearest exposed surface.
(3) The definition of μfi is given in BS EN 1992-1-1 : 2004, section 5.3.2(3).
(4) Normally, the cover specified in BS EN 1992-1-1 : 2004 will control this distance.

13.9 For buildings in Scotland, completed walls with appropriate finishes can satisfy the required durations of fire resistance and, therefore, may be used in separating walls. Where external walls are one metre or less from a relevant boundary, the construction should comply with the relevant exceptions on the use of combustible materials permitted by the guidance supporting the Building Regulations in Scotland.

13.10 Designers should refer to the relevant national Building Regulations and guidance for detailed conditions of use, particularly in respect of requirements for fire resistances of concrete, cavity closers and barriers, fire stopping of service penetrations and combustibility limitations for other materials and components used in the overall wall construction.

14 Proximity of flues and appliances

When installing the system in close proximity to certain flue pipes and/or heat-producing appliances, the guidance provisions in the relevant supporting documents of the national Building Regulations are acceptable.

15 Maintenance and repair

Minor repairs to the formwork can be carried out prior to concrete pouring using plywood strapping, or suitable expanding polyurethane foam, to reduce leakage of wet concrete and maintain the thermal integrity of the XPS board.

16 Durability

16.1 The XPS board will have a service life in excess of 60 years, provided it is protected from damage by the external and internal finishes of the wall construction and these are adequately maintained.

16.2 The rigid web connectors will have a durability compatible with the XPS board, if similarly protected.

16.3 Concrete walls constructed with the system will have a design life in excess of 60 years provided they are designed in accordance with section 6.

17 Reuse and recyclability

The system contains XPS insulation and thermoplastic, both of which can be recycled.

Installation

18 General

18.1 Installation of the R-Wall Insulating Concrete Formwork (ICF) System should be carried out by trained operatives or installers, in accordance with this Certificate (see section 5 of this Certificate).

18.2 In general, concrete is placed by pump using concrete from a batching plant. Small volumes can also be placed by hand or skip with adapted neck or pump, if necessary.

18.3 Suitably durable and mechanically adequate fixings must be used for all structural elements and must be post-drilled or cast into the concrete core. The XPS boards and the R-Tie / R-profile components must not be used as a structural medium to support any internal or external loads. In specifying wall fixings carrying vertical loads, consideration should be given to the effect of bending between the face of the concrete core and outer edge of the XPS.

18.4 Consideration should be given at the design stage to the incorporation of wall fixings, support brackets, service entry points, ducting, pipework and other building elements, to minimise post-construction cutting out or chasing of the concrete core. Other detailing can also be incorporated in the construction of the formwork subject to the Certificate holder's recommendations. In carrying out any cutting or modifications to the system, care must be taken

not to damage or weaken the formwork elements that could result in the loss of integrity or overall stability of the temporary construction. Cold bridging effects must also be considered where any services pass through the wall construction.

18.5 The preparation, installation and support of the system and application of any specified finishes must be in accordance with the Certificate holder's installation manual.

Foundation

18.6 The foundation must be level, smooth finished and within a tolerance of ±10 mm in any direction. Any out-of-tolerances must be made good prior to placement of formwork.

18.7 A damp-proof membrane is laid through the wall or under the slab (depending on the detailing) to prevent the ingress of damp during the construction process. The external detail must be such that protection is provided to at least 150 mm above the external ground level. For ground bearing floors, the slab dpm should link to the wall dpc to provide complete protection and eliminate the possibility of capillary action between the slab and wall.

Erection of Insulated Concrete Formwork

18.8 The forms may be readily cut or trimmed using a hot knife, fine-toothed saw or other appropriate saw as specified in the Certificate holder's installation manual. The line of wall is established and an XPS board is cut to a height of 80 mm from the foundation and secured to the foundation using a mechanical fixing and polyurethane glue.

18.9 Where the specified elevation height is not a multiple of the standard form height, adjustment may be made by cutting the bottom course of the forms, or trimming the top off the highest course of forms as described in the Certificate holder's installation manual.

18.10 Working from the corners to the centre of the walls, the pre-constructed R-Ties on R-Rails are inserted by pushing firmly into the pre-cut profiled groove within the XPS board, ensuring walls are in line and level. This is continued with subsequent boards and rails, creating courses. As work progresses, care should be taken to ensure that vertical joints do not coincide. Any reinforcement required for structural design purposes must be inserted as erection of the formwork proceeds. The sequence of erection of the forms and recommendations on joints are given in the Certificate holder's installation manual.

18.11 Pieces of XPS board must be inserted into any open sides to form a closer, adding reinforcement where required. If structural steel mesh reinforcement is used, this is laid along the R-Ties. The forms must be suitably restrained and sealed on the footing/slab in accordance with the Certificate holder's installation manual.

Restraint and propping

18.12 It is essential that effective bracing and propping of walls takes place during construction to ensure stability, level, straightness and plumb of walls. They must remain in place, and must be secured to cope with site conditions during concrete pouring and until the concrete has set.

18.13 Consideration should be given to additional bracing where stability could be compromised. Stability of the formwork is reduced by openings and therefore additional bracing should be introduced in these areas. Corner braces must always be used. Bracing and alignment systems should be fixed at a minimum distance of approximately 2.1 m and each side of door and window openings.

Reinforcement

18.14 All reinforcement should be accurately positioned to ensure that the minimum required concrete cover is provided. Starter, dowel bars and bar lapping lengths, where required, must be to the engineer's design and in accordance with BS EN 1992-1-1 : 2004.

Figure 5 Typical reinforcement layout

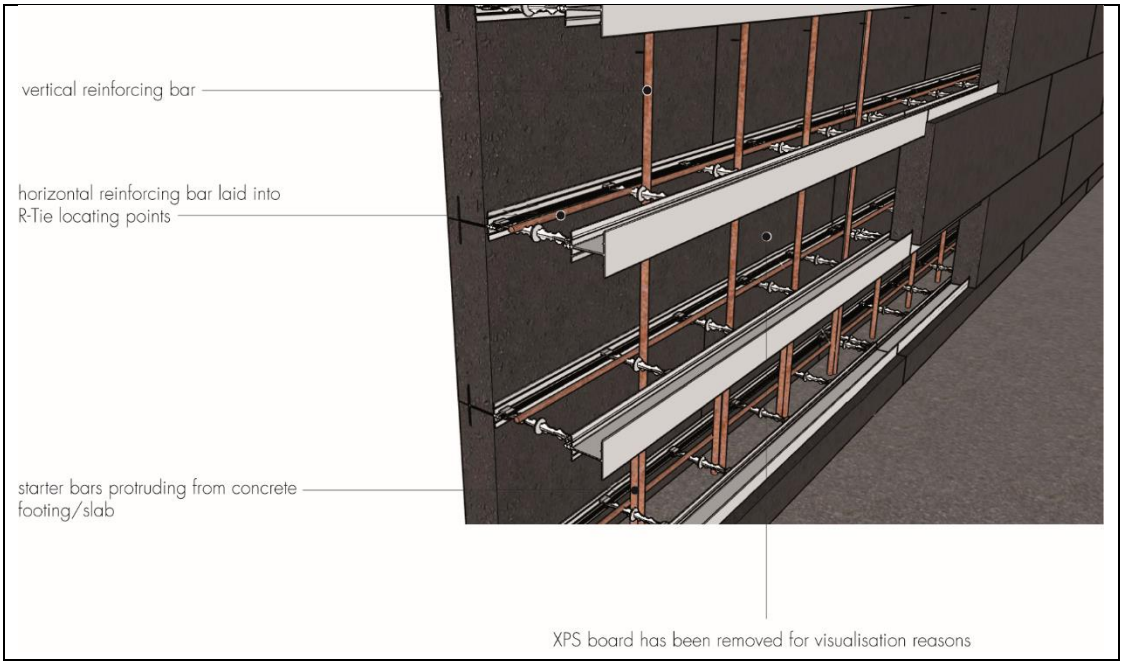

18.15 The type and quantities of reinforcement placed within the system are dependent on design and detail requirements. Horizontal reinforcement bars can be secured to the concave centre of the R-Ties. Ties can be moved but should not be cut or modified when locating reinforcement. Vertical reinforcement can then be secured to horizontal reinforcement at the required centres, secured using standard fixing methods (cable ties/wires).

Figure 6 Horizontal reinforcement layout

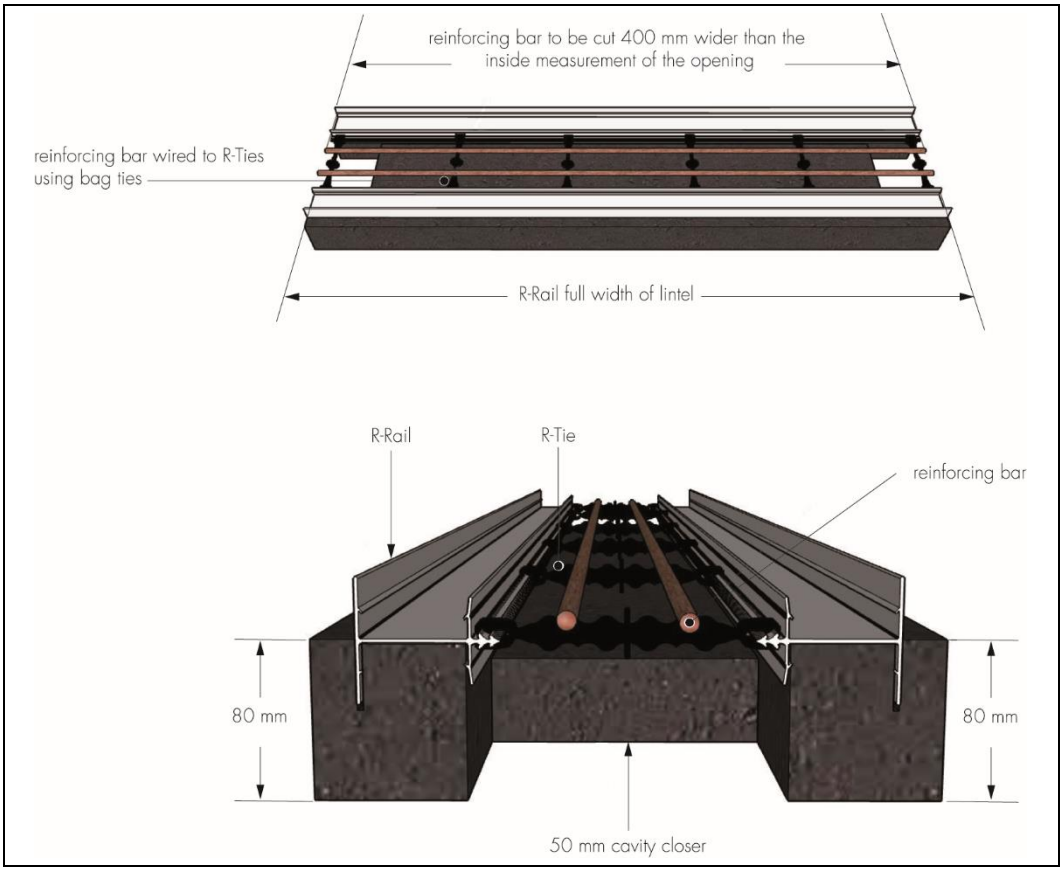

Windows and doors

18.16 Window and door openings are formed during construction of the formwork with XPS board cavity closers, cut and inserted into the void soffit, sill and reveals located around openings to seal them during concrete pouring. All openings and lintels formed should be braced adequately and supported in accordance with the Certificate holder's installation manual.

Figure 7 Frame closer to openings

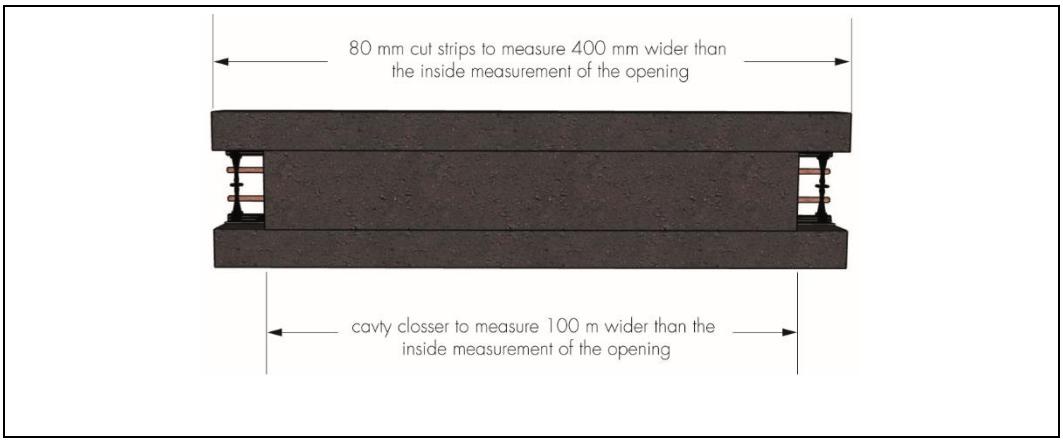

Concrete placement

18.17 Prior to the concrete pour, a check should be carried out on the system to ensure conformity with design and layout, correct alignment, and that bracings and props are secured. Reinforcement should be checked for correct cover distance and rigidity. Horizontal joints should also be protected for concrete overspill.

18.18 The concrete mix and slump must be checked to ensure they are to specification, in accordance with normal practice. A pre-pour checklist is set out in the Certificate holder's installation manual.

18.19 Concrete placement should start away from corners, directing the concrete around the walls of the building with a 900 to 1200 mm pour height, allowing concrete to free-flow into corners and below window openings until it reaches the plastic rail level. Each layer of concrete should be compacted by using a small diameter vibrating poker, in accordance with the Certificate holder's installation manual.

18.20 The first pour is allowed to stiffen before placing the second pour of concrete. The next course proceeds in the same manner until the first storey-height has been reached. Typically, storey heights should be placed in two to three pours. At window and door openings, concrete should be poured either side of each opening up to sill level and the concrete allowed to begin its initial set before the next pour is commenced.

Backfilling

18.21 Backfilling around the bottom layers of formwork to the ground floor should not take place until the concrete has reached sufficient design strength.

Electrical and plumbing installation

18.22 Electrical and plumbing services can be fixed within the formwork or into the concrete core by cutting chases into the XPS using a router, knife, saw or hot-wire knife. Any services introduced should conform to the national Building Regulations and Health and Safety requirements. Further details on fixing methods can be obtained from the Certificate holder's installation manual.

Wall penetrations

18.23 Openings or ducts for service penetrations can be positioned within the formwork prior to concrete pouring.

Internal finishes

18.24 A range of internal finishes (outside the scope of this Certificate) can be applied or fixed directly to the system. These should be screw-fixed into the rails or glued to the XPS using compatible adhesive.

18.25 Penetrations through the concrete, such as pipe entries or formwork ties, must also be securely sealed to maintain watertightness. The advice of the Certificate holder should be sought on suitable details.

External finishes

18.26 External cladding systems are outside the scope of this Certificate. Further details of suitable systems can be obtained from the Certificate holder.

Heavy wall loads

18.27 All structural point loads should be supported by the concrete core, and not the formwork planks or rails or ties. Typical methods include the use of timber blocks screwed or bolted into the concrete core or cast-in anchor bolts and metal plates. Further guidance can be obtained from the Certificate holder's installation manual.

Construction of T Junctions

18.28 Additional bracing is required at T-shaped intersections. Additional pressure is applied where the wall formworks intersect at right angles to another. For construction of a T-junction, the R-Wall is built and the XPS boards and rails are cut away to create a gap within the wall. Then, the abutting wall is built around the gap and secured on either side with a timber batten to keep the walls plumb. The Certificate holder can provide information on party wall construction details to satisfy Fire and Sound Regulations. Further details can be found in the Certificate holder's installation manual.

Figure 8 T-junctions in formwork

Technical Investigations

19 Tests

19.1 Tests were carried out and the results assessed to determine:

- tensile strength of ties
- pull-out strength of ties from board
- u-value calculations
- risk of condensation analysis
- declared thermal conductivity (λ_D) verification.

19.2 An assessment on the R-Wall Insulating Concrete Formwork (ICF) System was carried out in broad accordance with the requirements of ETAG 009 : 2002 as part of normal construction under site conditions. Observations were made on the possibility of steel reinforcement within the form, resistance to filling pressure and efficiency of filling using pumped concrete. The overall stability of formwork due to the head of wet concrete was also observed.

20 Investigations

20.1 A site visit was carried out to witness the installation process including construction of forms, placement of reinforcement, pouring of concrete and performance of form R-Tie connectors.

20.2 An assessment was made on existing technical data relating to thermal performance, fire and airtightness.

20.3 The manufacturing process was evaluated, including the methods adopted for quality control, and details were obtained of the quality and composition of the materials used.

Bibliography

BRE Report BR 262 : 2002 *Thermal insulation : avoiding risks*
BRE Report BR 443 : 2019 *Conventions for U-value calculations*
BS 4449 : 2005 + A3 : 2016 *Steel for the reinforcement of concrete — Weldable reinforcing steel — Bar, coil and decoiled product — Specification*
BS 8102 : 2009 *Code of practice for protection of below ground structures against water from the ground*
BS 8298-1 : 2010 *Code of practice for design and installation of natural stone cladding and lining — General*
BS 8298-2 : 2010 *Code of practice for design and installation of natural stone cladding and lining — Traditional handset external cladding*
BS 8298-3 : 2010 *Code of practice for design and installation of natural stone cladding and lining — Stone-faced pre-cast concrete cladding systems*
BS 8500-1 : 2015 + A1 : 2019 *Concrete — Complementary British Standard to BS EN 206-1 — Method of specifying and guidance for the specifier*
BS EN 206-1 : 2013 + A1 : 2016 *Concrete — Specification, performance, production and conformity*
BS EN 845-1 : 2013 + A1 : 2016 *Specification for ancillary components for masonry — Ties, tension straps, hangers and brackets*
BS EN 934-2 : 2009 + A1 : 2012 *Admixtures for concrete, mortar and grout — Concrete admixtures — Definitions and requirements, conformity, marking and labelling*
BS 5250 : 2011 + A1 : 2016 *Code of practice for control of condensation in buildings*
BS EN 1990 : 2002 + A1 : 2005 *Eurocode — Basis of structural design*
BS EN 1991-1-1 : 2002 *Eurocode 1 : Actions on structures — General actions — Densities, self-weight, imposed loads for buildings*
BS EN 1991-1-2 : 2002 *Eurocode 1 : Actions on structures — General actions — Actions on structures exposed to fire*
UK NA to BS EN 1991-1-2 : 2002 UK National Annex to *Eurocode 1 : Actions on structures — General actions — Actions on structures exposed to fire*
BS EN 1991-1-3 : 2003 + A1 : 2014 *Eurocode 1 : Actions on structures — General actions — Snow loads*
UK NA to BS EN 1991-1-3 : 2003 + A1 : 2014 UK National Annex to *Eurocode 1 : Actions on structures — General actions — Snow loads*
BS EN 1991-1-4 : 2005 + A1 : 2010 *Eurocode 1 : Actions on structures — General actions — Wind actions*
UK NA to BS EN 1991-1-4 : 2005 + A1 : 2010 UK National Annex to *Eurocode 1 : Actions on structures — General actions — Wind actions*
BS EN 1991-1-5 : 2003 *Eurocode 1 : Actions on structures — General actions — Thermal actions*
UK NA to BS EN 1991-1-5 : 2003 UK National Annex to *Eurocode 1 : Actions on structures — General actions — Thermal actions*
BS EN 1991-1-6 : 2005 *Eurocode 1 : Actions on structures — General actions — Actions during execution*
UK NA to BS EN 1991-1-6 : 2005 UK National Annex to *Eurocode 1 : Actions on structures — General actions — Actions during execution*
BS EN 1991-1-7 : 2006 + A1 : 2014 *Eurocode 1 : Actions on structures — General actions — Accidental actions*
UK NA to BS EN 1991-1-7 : 2006 + A1 : 2014 UK National Annex to *Eurocode 1 : Actions on structures — General actions — Accidental actions*
BS EN 1992-1-1 : 2004 + A1 : 2014 *Eurocode 2 : Design of concrete structures — General rules and rules for buildings*
UK NA to BS EN 1992-1-1 : 2004 + A1 : 2014 UK National Annex to *Eurocode 2 : Design of concrete structures — General rules and rules for buildings*
BS EN 1992-1-2 : 2004 *Eurocode 2: Design of concrete structures — General rules — Structural fire design*
UK NA to BS EN 1992-1-2 : 2004 UK National Annex to *Eurocode 2 : Design of concrete structures — General rules — Structural fire design*
BS EN 1996-2 : 2006 *Eurocode 6 : Design of masonry structures — General rules — Structural fire design*

BS EN ISO 10211 : 2017 *Thermal bridges in building construction — Heat flows and surface temperatures — Detailed calculations*
BS EN 13164 : 2012 + A1 : 2015 *Thermal insulation products for buildings — Factory made extruded polystyrene foam (XPS) products — Specification*
BS EN ISO 13788 : 2012 *Hygrothermal performance of building components and building elements. Internal surface temperature to avoid critical surface humidity and interstitial condensation. Calculation methods*
BS EN 13914-1 : 2016 *Design, preparation and application of external rendering and internal plastering — External rendering*
BS EN ISO 6946 : 2017 *Building components and building elements — Thermal resistance and thermal transmittance — Calculation method*
BS EN ISO 10456 : 2007 *Building materials and products — Hygrothermal properties — Tabulated design values and procedures for determining declared and design thermal values*
ETAG 009 : 2002 *Guideline for European Technical Approval of non-loadbearing permanent shuttering kits/systems based on hollow blocks or panels of insulating materials and sometimes concrete*

21 Conditions

21.1 This Certificate:

- relates only to the product/system that is named and described on the front page
- is issued only to the company, firm, organisation or person named on the front page – no other company, firm, organisation or person may hold or claim that this Certificate has been issued to them
- is valid only within the UK
- has to be read, considered and used as a whole document – it may be misleading and will be incomplete to be selective
- is copyright of the BBA
- is subject to English Law.

21.2 Publications, documents, specifications, legislation, regulations, standards and the like referenced in this Certificate are those that were current and/or deemed relevant by the BBA at the date of issue or reissue of this Certificate.

21.3 This Certificate will remain valid for an unlimited period provided that the product/system and its manufacture and/or fabrication, including all related and relevant parts and processes thereof:

- are maintained at or above the levels which have been assessed and found to be satisfactory by the BBA
- continue to be checked as and when deemed appropriate by the BBA under arrangements that it will determine
- are reviewed by the BBA as and when it considers appropriate.

21.4 The BBA has used due skill, care and diligence in preparing this Certificate, but no warranty is provided.

21.5 In issuing this Certificate the BBA is not responsible and is excluded from any liability to any company, firm, organisation or person, for any matters arising directly or indirectly from:

- the presence or absence of any patent, intellectual property or similar rights subsisting in the product/system or any other product/system
- the right of the Certificate holder to manufacture, supply, install, maintain or market the product/system
- actual installations of the product/system, including their nature, design, methods, performance, workmanship and maintenance
- any works and constructions in which the product/system is installed, including their nature, design, methods, performance, workmanship and maintenance
- any loss or damage, including personal injury, howsoever caused by the product/system, including its manufacture, supply, installation, use, maintenance and removal
- any claims by the manufacturer relating to CE marking.

21.6 Any information relating to the manufacture, supply, installation, use, maintenance and removal of this product/system which is contained or referred to in this Certificate is the minimum required to be met when the product/system is manufactured, supplied, installed, used, maintained and removed. It does not purport in any way to restate the requirements of the Health and Safety at Work etc. Act 1974, or of any other statutory, common law or other duty which may exist at the date of issue or reissue of this Certificate; nor is conformity with such information to be taken as satisfying the requirements of the 1974 Act or of any statutory, common law or other duty of care.

British Board of Agrément
Bucknalls Lane
Watford
Herts WD25 9BA
©2020
tel: 01923 665300
clientservices@bbacerts.co.uk
www.bbacerts.co.uk